REVISIONS			
REV		DATE	APPROVED

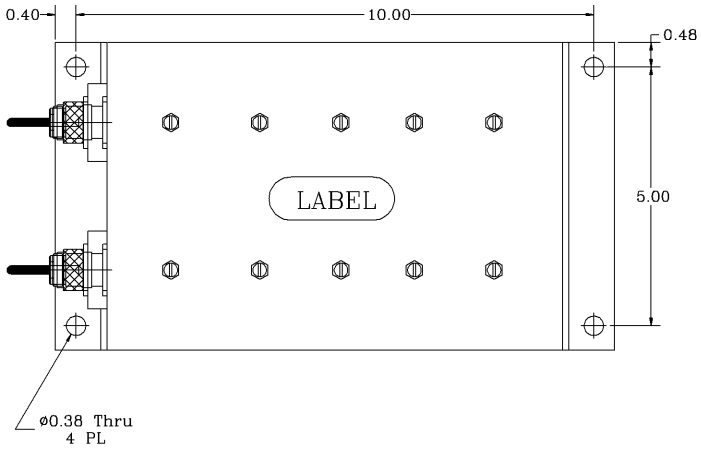

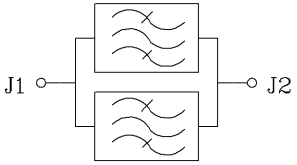

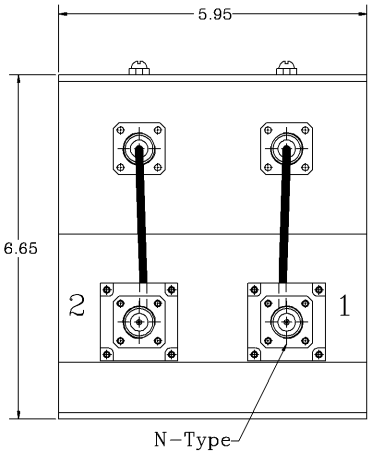

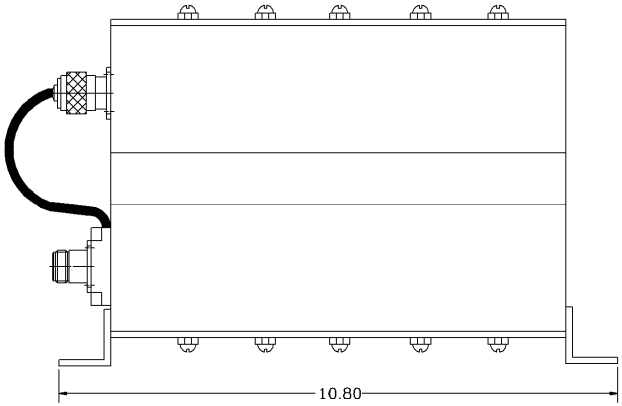

Electrical Specifications

*3dB Passband Frequency Range [MHz]	: 821–824
*Insertion Loss @ Center Frequency [dB]	: <1.8
*Rejection DC to 810 MHz [dB]	: 60 (Min.), 80 (Typ.)
@ 820.5 MHz [dB]	: 15 (Min.), (18 Typ.)
@ 826 MHz [dB]	: 20 (Min.), 25 (Typ.)
*3dB Passband Frequency Range [MHz]	: 866–869
*Insertion Loss @ Center Frequency [dB]	: <1.8
*Rejection DC to 851 MHz [dB]	: 60 (Min.), 80 (Typ.)
@ 865 MHz [dB]	: 20 (Min.)
@ 871 MHz [dB]	: 25 (Min.), 30 (Typ.)
*Input/Output Impedance	: 50 ohm
*VSWR IN/OUT	: < 1.28:1
*RF Power Capability CW	: 20 Watt
*Input/Output @ DC Ground Potential	

OPERATING TEMPERATURE RANGE: −0°C TO +55°C

NOTES:

1. BREAK ALL CORNERS & EDGES.005/.010.
2. FINAL FINISH:
   EPOXY GRAY – OPTIONAL

SKU # 98021024

PROPRIETARY DOCUMENT:
THE CONTENTS OF THIS DOCUMENT WITH ALL INFORMATION AND PROCESSES ARE THE SOLE PROPERTY OF G-Way Microwave. THIS DOCUMENT MAY NOT BE DUPLICATED OR DISCLOSED TO ANY PARTY EXCEPT BY EXPRESSLY WRITTEN PERMISSION. THE ONLY AUTHORIZED USE OF THIS DOCUMENT BY A VENDOR IS FOR QUOTE PURPOSES AND SAID VENDOR AGREES NOT TO DISCLOSE ITS CONTENTS TO ANY THIRD PARTY. THIS DOCUMENT IS COPYRIGHTED 1998.

DIMENSIONS ARE IN INCHES. TOLERANCES ARE: ANGLES ± 1° DECIMALS .X ± .05 .XX ± .01 .XXX ± .003	CONTRACT NO:		G-Way Microwave
	APPROVALS	DATE	TITLE Duplexer NPSPAC CBB845/3SK-S1
	DRAWN Sivak	04/03	
TREATMENT	CHECKED		
FINISH 63	ENG.		SIZE A · CAGE CODE 3K1H4 · DWG NO: CBB845/3SK-S1-1 · REV. A
	DESIGN ACTIVITY		
MATERIAL AL6061-T6			SCALE None · SHEET 1 OF 1