REVISIONS			
REV		DATE	APPROVED
A	Mounting configuration changed.	03/06	S. Sivak
B	Power and PIM performance updated.	10/10	G. David

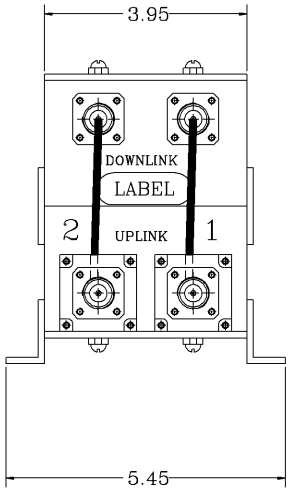

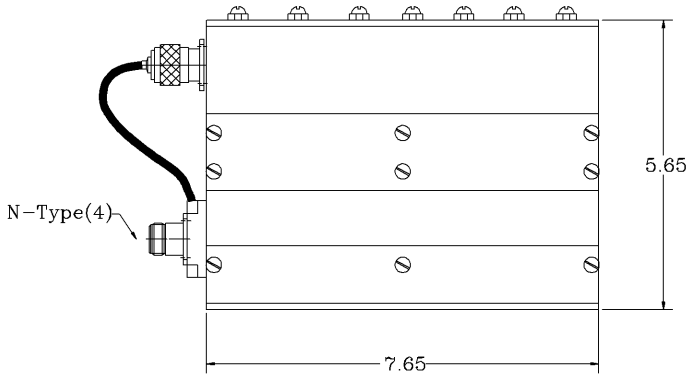

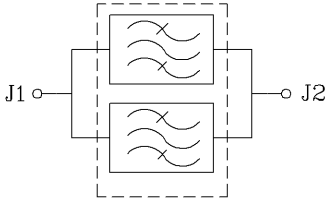

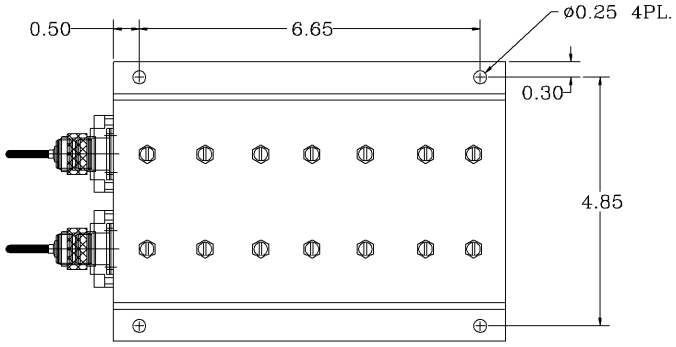

Electrical Specifications

*Up-Link 1dB Frequency Range [MHz]	: 835-849
*Insertion Loss @ Center Frequency [dB]	: <1.0
*Rejection DC to 760 MHz [dB]	: 80 (Min.)
@ 832 MHz [dB]	: 35 (Min.)
@ 851 to 866 MHz [dB]	: 30 (Min.), 35 (Typ.)
*Down-Link 1dB Frequency Range [MHz]	: 880-894
*Insertion Loss @ Center Frequency [dB]	: <1.0
*Rejection DC to 849 MHz [dB]	: 80 (Min.)
@ 851 to 866 MHz [dB]	: 25 (Min.), 30 (Typ.)
@ 896 MHz [dB]	: 25 (Min.)
@ 940 to 2500 MHz [dB]	: 80 (Min.), 90 (Typ.)
*RF Power Capability CW	: 60 Watt
PEAK	: 500 Watt
*IM Products, IM3 @ 2 x +33 dBm [dBc]	: -143 (Min.)
*Input/Output Impedance	: 50 ohm
*VSWR IN/OUT	: < 1.34:1
*Finish: Flat Epoxy Gray - optional	

OPERATING TEMPERATURE RANGE: -10°C TO +65°C

NOTES:

1. BREAK ALL CORNERS & EDGES.005/.010.
2. FINAL FINISH:
   EPOXY GRAY - OPTIONAL

SKU # 98021020

PROPRIETARY DOCUMENT:
THE CONTENTS OF THIS DOCUMENT WITH ALL INFORMATION AND PROCESSES ARE THE SOLE PROPERTY OF G-Way Microwave. THIS DOCUMENT MAY NOT BE DUPLICATED OR DISCLOSED TO ANY PARTY EXCEPT BY EXPRESSLY WRITTEN PERMISSION. THE ONLY AUTHORIZED USE OF THIS DOCUMENT BY A VENDOR IS FOR QUOTE PURPOSES AND SAID VENDOR AGREES NOT TO DISCLOSE ITS CONTENTS TO ANY THIRD PARTY. THIS DOCUMENT IS COPYRIGHTED 1998.

DIMENSIONS ARE IN INCHES. TOLERANCES ARE: ANGLES ± 1° DECIMALS .X ± .05 .XX ± .01 .XXX ± .003	CONTRACT NO:		G-Way Microwave
	APPROVALS	DATE	TITLE High "Q" Duplexer Cell B CBB864/14SK-S1
	DRAWN Sivak	03/05	
TREATMENT	CHECKED		
FINISH 63	ENG.		SIZE A · CAGE CODE 3K1H4 · DWG NO: CBB864/14SK-S1-1 · REV. B
	DESIGN ACTIVITY		
MATERIAL AL6061-T6			SCALE None · SHEET 1 OF 1